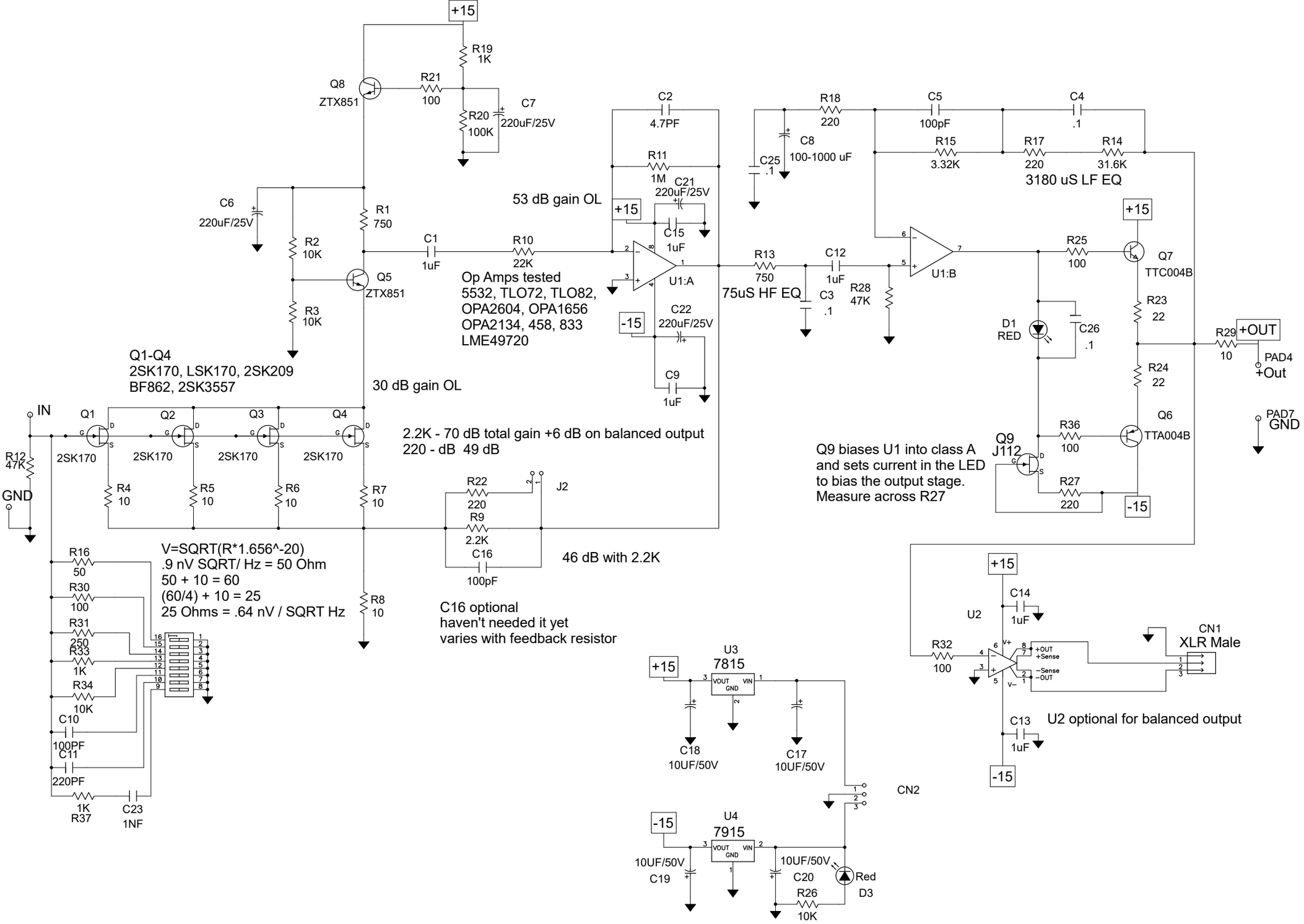
+15
R19
1K
Q8
ZTX851
R21
100
R20
100K
C7
220uF/25V
C6
220uF/25V
R1
750
R2
10K
Q5
ZTX851
R3
10K
C1
1uF
R10
22K
53 dB gain OL
C2
4.7PF
R11
1M
C21
220uF/25V
C15
1uF
U1:A
C22
220uF/25V
-15
C9
1uF
Op Amps tested
5532, TLO72, TLO82,
OPA2604, OPA1656
OPA2134, 458, 833
LME49720
Q1-Q4
2SK170, LSK170, 2SK209
BF862, 2SK3557
30 dB gain OL
IN
Q1
Q2
Q3
Q4
2SK170
R12
47K
GND
R4
10
R5
10
R6
10
R7
10
R8
10
2.2K - 70 dB total gain +6 dB on balanced output
220 - dB 49 dB
R22
220
R9
2.2K
C16
100pF
J2
46 dB with 2.2K
C16 optional
haven't needed it yet
varies with feedback resistor
V=SQRT(R*1.656^-20)
.9 nV SQRT/ Hz = 50 Ohm
50 + 10 = 60
(60/4) + 10 = 25
25 Ohms = .64 nV / SQRT Hz
R16
50
R30
100
R31
250
R33
1K
R34
10K
C10
100PF
C11
220PF
1K
R37
C23
1NF
R13
750
75uS HF EQ
C3
.1
C12
1uF
R28
47K
C25
.1
C8
100-1000 uF
R18
220
C5
100pF
C4
.1
R15
3.32K
R17
220
R14
31.6K
3180 uS LF EQ
U1:B
R25
100
Q7
TTC004B
R23
22
D1
RED
C26
.1
R29
10
+OUT
PAD4
+Out
R24
22
Q6
TTA004B
PAD7
GND
R36
100
Q9
J112
R27
220
Q9 biases U1 into class A
and sets current in the LED
to bias the output stage.
Measure across R27
U2
C14
1uF
R32
100
+OUT
+Sense
-Sense
-OUT
CN1
XLR Male
C13
1uF
U2 optional for balanced output
U3
7815
VOUT
VIN
GND
C18
10UF/50V
C17
10UF/50V
CN2
U4
7915
10UF/50V
C19
10UF/50V
C20
Red
D3
R26
10K